30-0015028.0000

HILLVIEW FARMS INC

19819 ST RT 31
MARYSVILLE, OH 43040

TAYLOR TOWNSHIP / MARYSVILLE EVSD

LEGAL INFORMATION

VMS 4264
BK 282 PG 556
Acres:34.1080

079-00-00-030.000
AGR DISTRICT: :2019:2019

QUALIFIED CREDITS: CAUV: 83483: 1983 (01/26/2023)

Property Class: 111
Neighborhood 3059305
Map:
Block:
Card:
Bk: Pg:

	OWNERSHIP	ADDRESS	CITY	STATE	ZIP	DATE	AMOUNT	DEED:CONV#: ACRES	JS	VALID
1	HILLVIEW FARMS INC	19819 STATE ROUTE 31	MARYSVILLE	OH	43040	01/01/1900	0	UNK : 0:34.1080	☐	☐
2							0	0	☐	☐
3							0	0	☐	☐

X: ☐ TTO LISTER: ALW DATE: 08/23/2010 TIME: 12:00:00 AM ☐ LETTER ☐ LETTER REC'D GIS CODE

STREET/ROAD	TOPOGRAPHY	PU-UTILITIES-PR	NEIGHBORHOOD	INFLUENCE FACTORS	
■ PAVED	☐ LEVEL	☐ WATER ■	☐ IMPROVING	☐ A. NO ROAD	☐ F. RESTRICT
☐ GRAVEL	☐ HIGH	☐ SEWER ■	☐ STATIC	☐ B. TOPGRHY	☐ G. WOOD LT
☐ DIRT	☐ LOW	☐ GAS ☐	☐ DECLINING	☐ C. EX FRONT	☐ H. VACANCY
☐ SIDEWALKS	■ ROLLING	■ ELECTRIC ☐	☐ OLD	☐ D. QUANTITY	☐ I. WATER FRONT
☐ CURBS	☐ STANDARD	☐ STANDARD	☐ STANDARD	☐ E. SZ/SHAPE	☐ J. OTHER/CDU

PROPERTY LOCATION
19819 ST RT 31, MARYSVILLE 43040

COMMENT
TY2023:Net Gen=$2,936.24, Other Assessment=$0.00
HILLVIEW FARMS INC
04 7.242 acres split to 30-0015028.100 MOVED 7 GRAIN BINS TO PARCEL 30-0015025.0000, CHANGED _F TO SHED, ADDED STP, CHANGE 1.75SFR TO 1.75SBRK (CONC. BLK), REMOVED _OLD HSE, CHANGED _023 TO SHED, CHANGED MSMTS ON SHED AND POLE BLDG, ADDED POLE BLDG
2018 Received data mailer no change-JC
2019REVAL CHG PART OF SHED TO EFP, RMV STP, ADD CPAT, CHG OMP TO OFP, CHG 1.75SBRK TO 1.75SFR, RMV SHED (1760SF), ADD 1 SIDE OPEN FEATURE TO PB (4500SF), ADD REMOD YR TO PB'S (4320SF AND 1008SF), CHG SILO'S TO SLC'S, CHG GARAGE TO SHOP, ADD CONC PAD
(Mod SM:)130

LAND COMPUTATIONS

LAND TYPE	SIZE	M RATE C	INF	M VALUE C
CR:Crop TOTAL	**A 30.0643**	**6,895 1,655**		**209,600 52,340**
Gwd5C2	A 1.9530	5,680 480		11,090 940
Ble1A1	A 3.3965	7,250 1,950		24,620 6,620
PK	A 6.5327	7,810 2,700		51,020 17,640
HO	A 1.0086	7,250 1,990		7,310 2,010
Gwe1B1	A 6.8161	6,500 1,120		44,300 7,630
Ble1B1	A 10.3574	6,880 1,690		71,260 17,500
HS:Homesite	A 1.0000	28,600 0		28,600 0
ROW:Right of Way/Road	A .5858	0 0		0 0
Total Acres: 34.1080			TOTAL	241,770 53,310

VALUATION SUMMARY

VALUE YEAR (EFF RATE)		2023 (49.54)	2023 (49.54)	2022 (49.67)	2022 (49.67)	2021 (57.98)
REASON FOR CHANGE		CAUV	MISC	CAUV	RAPP	CAUV
APPRAISED VALUE	LAND	81,930	241,770	81,930	241,770	69,700
	IMPR	101,940	101,940	101,940	101,940	90,570
	TOTAL	183,870	343,710	183,870	343,710	160,270
ASSESSED VALUE	LAND	28,680	84,620	28,680	84,620	24,400
	IMPR	35,680	35,680	35,680	35,680	31,700
	TOTAL	64,360	120,300	64,360	120,300	56,100
NET GENERAL		2,936.24	2,936.24	2,943.92	2,943.92	2,996.12

OCCUPANCY	EXTERIOR
■ SF ☐ DU ☐ TR	☐ WOOD
☐ CONVERSION	☐ STUCCO
BUILDING TYPE	☐ ALM/VYNL
☐ MOBILE HOME	■ CONC BLK
☐ BI/TR LEVEL	☐ METAL
☐ MOD/MAN	☐ BRICK
☐ _____	☐ STONE

ROOFING	ROOF TYPE
☐ METAL	■ GABLE
☐ SLT/TLE	☐ HIP
■ SHINGLES	☐ GAMBREL
☐ SHAKES	☐ MANSARD
☐ COMPOSITE	☐ FLAT

FLOORS	B	1	2	3	U
CONCRETE	☐	☐	☐	☐	☐
WOOD	☐	■	☐	☐	☐
TILE/COMPO	☐	☐	☐	☐	☐
CARPET	☐	☐	☐	☐	☐

INT. FINISH	B	1	2	3	U
PLASTER/DW	☐	■	☐	☐	☐
PANELING	☐	☐	☐	☐	☐
UNFINISHED	☐	☐	☐	☐	☐

ACCOMMODATIONS					
# OF ROOMS		3			
BEDROOMS					
FIREPLACES					

HEAT & AC	B	1	2	3	U
NO HEAT	☐	☐	☐	☐	☐
CTRL HEAT	☐	■	☐	☐	☐
HW/STEAM	☐	■	☐	☐	☐
ELECTRIC	☐	☐	☐	☐	☐
HEAT PUMP	☐	☐	☐	☐	☐
FLR/WALL	☐	☐	☐	☐	☐
STVE/SPCE	☐	☐	☐	☐	☐
GEOTHERMAL	☐	☐	☐	☐	☐
OUTSIDE	☐	☐	☐	☐	☐
CTRL A/C	☐	☐	☐	☐	☐

PLUMBING	BASE ☐				
X FULL BATH					
X HALF BATH					
X FIXTURES					

FLOOR	AREA	CONST	VALUE
1	785	FR	180,930
.75	420	FR	38,600

SUBTOTAL		219,530
MULTI-FAMILY #	0	0
BUILDING TYPE	100%	0
BSMT FINISH	0 S.F.	0
FIREPLACE #	0	0
HEATING	0 S.F.	0
AIR COND	0 S.F.	0
PLUMBING #	0	-5,760
GARAGES & CARPORTS		0
EXTRA FEATURES		6,250
SUBTOTAL		220,020
GRADE FACTOR		60 %
UNADJUSTED VALUE		132,010
FACTOR		100 %

SKETCH

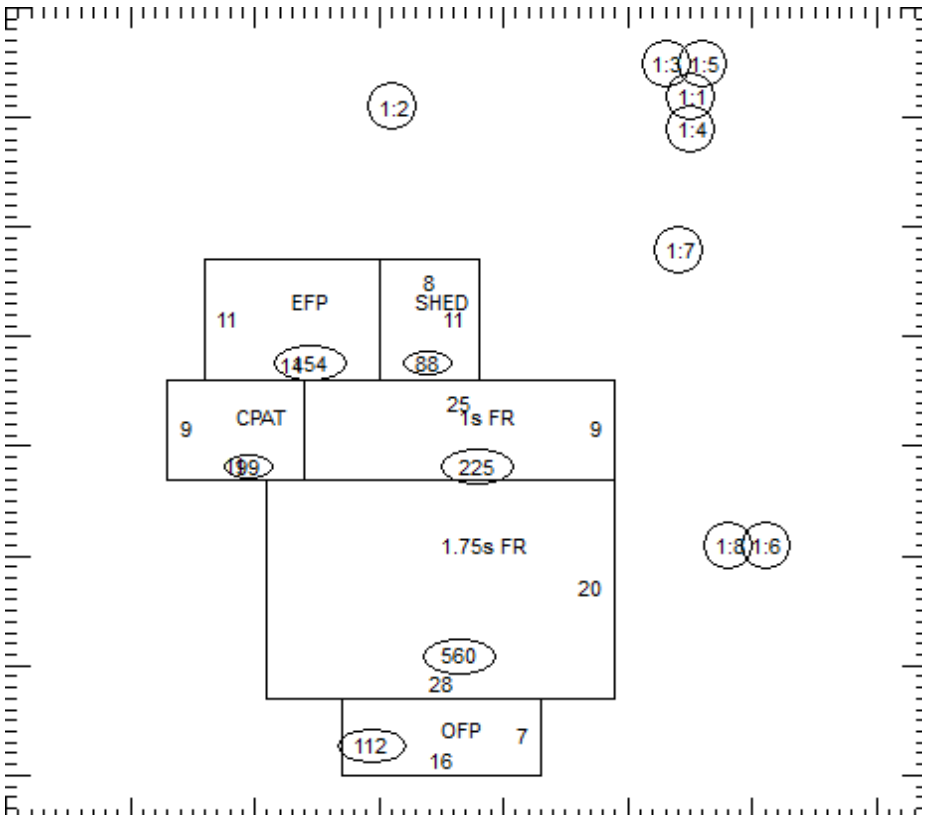

OCCUPANCY	ST.HT	SIZE	AREA	GRADE	PRICE	AGE	REMD	CND	UNADJ VAL	PHYS	PHYS VAL	FUNC	TRUE VAL
DWELLING	1.75	SK	1,205	E+		OLD		A	132,010	59	54,120		51,960
1 Shed-Fr	SV*	20x32	640	N/A		OLD		A		100			600
2 PoleBld<2021		48x90	4,320	C	9.50	1974	2016	A	41,040	34	27,090		27,090
3 Conc-Silo C		16x60	960	C	1000.00	1968		F	1,000		1,000		1,000
4 PoleBld<2021		90x50	4,500	C	7.60	1962		F	34,200	62	13,000		13,000
5 Conc-Silo C		20x70	1,400	C	1000.00	1966		F	1,000		1,000		1,000
6 Shop		24x46	1,104	D	10.00	1920		F	11,040	80	2,210		2,210
7 PoleBld<2021		28x36	1,008	D	7.60	1980	2016	A	7,660	36	4,900		4,900
8 Concrete Pad		8x12	96	C	2.00	2016		A	190	6	180		180
9													
10													
11													
											TOTAL		101,940

30-0015028.0000

* Value Override Item

COMMENTS

CARD 2 RMV PB,GIN,PB 2010 PER DB FORM FILED || CARD 2 OBS ONLY CARD 3 30-15-28/02
>>OB Features: 1.4 <1 Side Open>
(88SF SHED=$1,270),(112SF OFP=$1,340),(154SF EFP=$3,400),(99SF CPAT=$240)
Dwelling has an Economic Factor of 96%
2023=2552.58, 2022=2559.24, 2021=2428.94: Total=7540.76

30-0015028.0000

HILLVIEW FARMS INC

19819 ST RT 31
MARYSVILLE, OH 43040

TAYLOR TOWNSHIP / MARYSVILLE EVSD

LEGAL INFORMATION

VMS 4264
BK 282 PG 556
Acres:34.1080

079-00-00-030.000
AGR DISTRICT: :2019:2019

QUALIFIED CREDITS: CAUV: 83483: 1983 (01/26/2023)

Property Class: 111
Neighborhood 3059305
Map:
Block:
Card:
Bk: Pg:

	OWNERSHIP	ADDRESS	CITY	STATE	ZIP	DATE	AMOUNT	DEED:CONV#: ACRES	JS	VALID
1	HILLVIEW FARMS INC	19819 STATE ROUTE 31	MARYSVILLE	OH	43040	01/01/1900	0	UNK : 0:34.1080	☐	☐
2							0	0	☐	☐
3							0	0	☐	☐

X: ☐ TTO LISTER: ALW DATE: 08/23/2010 TIME: 12:00:00 AM ☐ LETTER ☐ LETTER REC'D GIS CODE

STREET/ROAD	TOPOGRAPHY	PU-UTILITIES-PR	NEIGHBORHOOD	INFLUENCE FACTORS	
■ PAVED	☐ LEVEL	☐ WATER ■	☐ IMPROVING	☐ A. NO ROAD	☐ F. RESTRICT
☐ GRAVEL	☐ HIGH	☐ SEWER ■	☐ STATIC	☐ B. TOPGRHY	☐ G. WOOD LT
☐ DIRT	☐ LOW	☐ GAS ☐	☐ DECLINING	☐ C. EX FRONT	☐ H. VACANCY
☐ SIDEWALKS	■ ROLLING	■ ELECTRIC ☐	☐ OLD	☐ D. QUANTITY	☐ I. WATER FRONT
☐ CURBS	☐ STANDARD	☐ STANDARD	☐ STANDARD	☐ E. SZ/SHAPE	☐ J. OTHER/CDU

PROPERTY LOCATION
19819 ST RT 31, MARYSVILLE 43040

COMMENT

LAND COMPUTATIONS

LAND TYPE	SIZE	M	RATE	C	INF	M	VALUE	C
WA:Waste	A .3996		50	0			20	0
WD:Woods TOTAL	**A 2.0583**		**1,650**	**423**			**3,550**	**970**
HO	A .0089		1,310	230			10	0
PK	A .8519		2,380	810			2,030	690
Ble1B1	A 1.1975		1,260	230			1,510	280
Total Acres: 34.1080					TOTAL		241,770	53,310

VALUATION SUMMARY

VALUE YEAR (EFF RATE)		2021 (57.98)	2020 (52.30)	2020 (52.30)	2019 (52.95)	2019 (52.95)
REASON FOR CHANGE		MISC	CAUV	MISC	CAUV	RAPP
APPRAISED VALUE	LAND	199,640	69,700	199,640	69,700	199,640
	IMPR	90,570	90,570	90,570	90,570	90,570
	TOTAL	290,210	160,270	290,210	160,270	290,210
ASSESSED VALUE	LAND	69,870	24,400	69,870	24,400	69,870
	IMPR	31,700	31,700	31,700	31,700	31,700
	TOTAL	101,570	56,100	101,570	56,100	101,570
NET GENERAL		2,996.12	2,664.70	2,664.70	2,697.66	2,697.66

OCCUPANCY	EXTERIOR
☐SF ☐DU ☐TR	☐ WOOD
☐CONVERSION	☐ STUCCO
BUILDING TYPE	☐ ALM/VYNL
☐ MOBILE HOME	☐ CONC BLK
☐ BI/TR LEVEL	☐ METAL
☐ MOD/MAN	☐ BRICK
☐ _____	☐ STONE

ROOFING	ROOF TYPE
☐ METAL	☐ GABLE
☐ SLT/TLE	☐ HIP
☐ SHINGLES	☐ GAMBREL
☐ SHAKES	☐ MANSARD
☐ COMPOSITE	☐ FLAT

FLOORS	B	1	2	3	U
CONCRETE	☐	☐	☐	☐	☐
WOOD	☐	☐	☐	☐	☐
TILE/COMPO	☐	☐	☐	☐	☐
CARPET	☐	☐	☐	☐	☐

INT. FINISH	B	1	2	3	U
PLASTER/DW	☐	☐	☐	☐	☐
PANELING	☐	☐	☐	☐	☐
UNFINISHED	☐	☐	☐	☐	☐

ACCOMMODATIONS					
# OF ROOMS					
BEDROOMS					
FIREPLACES					

HEAT & AC	B	1	2	3	U
NO HEAT	☐	☐	☐	☐	☐
CTRL HEAT	☐	☐	☐	☐	☐
HW/STEAM	☐	☐	☐	☐	☐
ELECTRIC	☐	☐	☐	☐	☐
HEAT PUMP	☐	☐	☐	☐	☐
FLR/WALL	☐	☐	☐	☐	☐
STVE/SPCE	☐	☐	☐	☐	☐
GEOTHERMAL	☐	☐	☐	☐	☐
OUTSIDE	☐	☐	☐	☐	☐
CTRL A/C	☐	☐	☐	☐	☐

PLUMBING	BASE ☐				
X FULL BATH					
X HALF BATH					
X FIXTURES					

FLOOR	AREA	CONST	VALUE

SUBTOTAL		0
MULTI-FAMILY #	0	0
BUILDING TYPE	000%	0
BSMT FINISH	0 S.F.	0
FIREPLACE #	0	0
HEATING	0 S.F.	0
AIR COND	0 S.F.	0
PLUMBING #	0	0
GARAGES & CARPORTS		0
EXTRA FEATURES		0
SUBTOTAL		0
GRADE FACTOR		%
UNADJUSTED VALUE		0
FACTOR		%

SKETCH

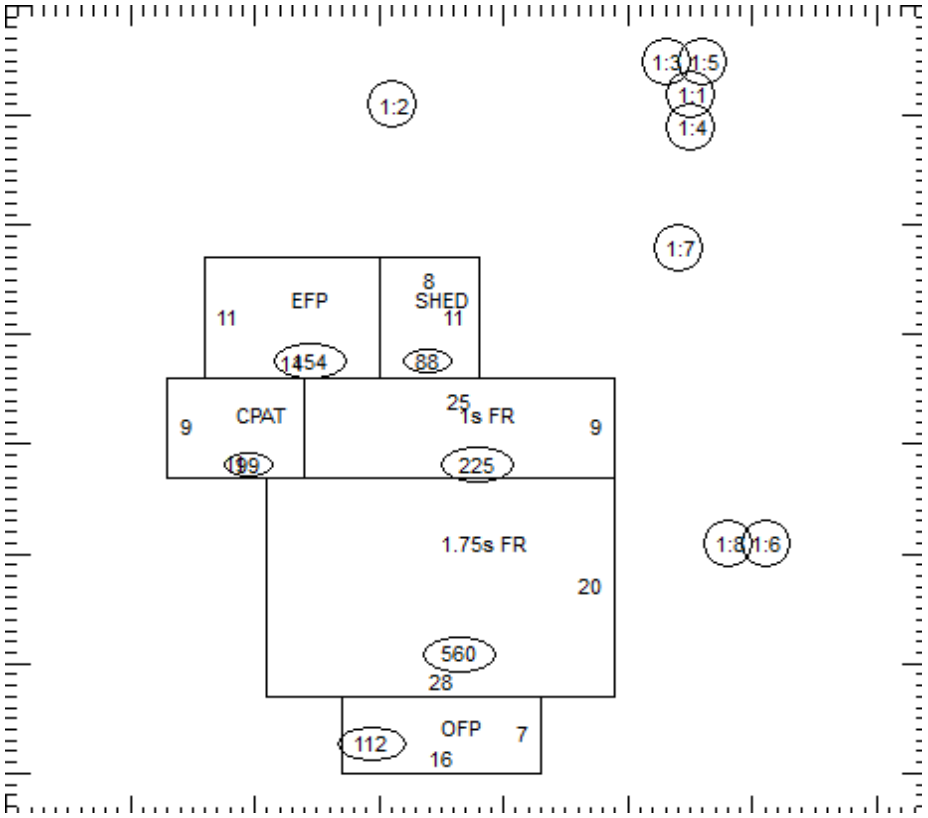

OCCUPANCY	ST.HT	SIZE	AREA	GRADE	PRICE	AGE	REMD	CND	UNADJ VAL	PHYS	PHYS VAL	FUNC	TRUE VAL
DWELLING		SK											
1													
2													
3													
4													
5													
6													
7													
8													
9													
10													
11													
												TOTAL	0

30-0015028.0000

COMMENTS

30-0015028.0000

HILLVIEW FARMS INC

19819 ST RT 31
MARYSVILLE, OH 43040

TAYLOR TOWNSHIP / MARYSVILLE EVSD

LEGAL INFORMATION

VMS 4264
BK 282 PG 556
Acres:34.1080

079-00-00-030.000
AGR DISTRICT: :2019:2019

QUALIFIED CREDITS: CAUV: 83483: 1983 (01/26/2023)

Property Class: 111
Neighborhood 3059305
Map:
Block:
Card:
Bk: Pg:

	OWNERSHIP	ADDRESS	CITY	STATE	ZIP	DATE	AMOUNT	DEED:CONV#: ACRES	JS	VALID
1	HILLVIEW FARMS INC	19819 STATE ROUTE 31	MARYSVILLE	OH	43040	01/01/1900	0	UNK : 0:34.1080	☐	☐
2							0	0	☐	☐
3							0	0	☐	☐

X: ☐ TTO LISTER: ALW DATE: 08/23/2010 TIME: 12:00:00 AM ☐ LETTER ☐ LETTER REC'D GIS CODE

STREET/ROAD	TOPOGRAPHY	PU-UTILITIES-PR	NEIGHBORHOOD	INFLUENCE FACTORS	
■ PAVED	☐ LEVEL	☐ WATER ■	☐ IMPROVING	☐ A. NO ROAD	☐ F. RESTRICT
☐ GRAVEL	☐ HIGH	☐ SEWER ■	☐ STATIC	☐ B. TOPGRHY	☐ G. WOOD LT
☐ DIRT	☐ LOW	☐ GAS ☐	☐ DECLINING	☐ C. EX FRONT	☐ H. VACANCY
☐ SIDEWALKS	■ ROLLING	■ ELECTRIC ☐	☐ OLD	☐ D. QUANTITY	☐ I. WATER FRONT
☐ CURBS	☐ STANDARD	☐ STANDARD	☐ STANDARD	☐ E. SZ/SHAPE	☐ J. OTHER/CDU

PROPERTY LOCATION
19819 ST RT 31, MARYSVILLE 43040

COMMENT

LAND COMPUTATIONS

LAND TYPE	SIZE	M RATE C	INF	M VALUE C
Total Acres: 34.1080			TOTAL	241,770 53,310

VALUATION SUMMARY

VALUE YEAR (EFF RATE)		2018 (56.93)	2018 (56.93)	2017 (58.27)	2017 (58.27)	2016 (58.11)
REASON FOR CHANGE		CAUV	MISC	CAUV	MISC	CAUV
APPRAISED VALUE	LAND	93,290	175,950	93,290	175,950	93,290
	IMPR	81,260	81,260	81,260	81,260	81,260
	TOTAL	174,550	257,210	174,550	257,210	174,550
ASSESSED VALUE	LAND	32,650	61,580	32,650	61,580	32,650
	IMPR	28,440	28,440	28,440	28,440	28,440
	TOTAL	61,090	90,020	61,090	90,020	61,090
NET GENERAL		3,157.38	3,157.38	3,213.60	3,213.60	3,203.32

OCCUPANCY	EXTERIOR
☐SF ☐DU ☐TR	☐ WOOD
☐CONVERSION	☐ STUCCO
BUILDING TYPE	☐ ALM/VYNL
☐ MOBILE HOME	☐ CONC BLK
☐ BI/TR LEVEL	☐ METAL
☐ MOD/MAN	☐ BRICK
☐ _____	☐ STONE

ROOFING	ROOF TYPE
☐ METAL	☐ GABLE
☐ SLT/TLE	☐ HIP
☐ SHINGLES	☐ GAMBREL
☐ SHAKES	☐ MANSARD
☐ COMPOSITE	☐ FLAT

FLOORS	B	1	2	3	U
CONCRETE	☐	☐	☐	☐	☐
WOOD	☐	☐	☐	☐	☐
TILE/COMPO	☐	☐	☐	☐	☐
CARPET	☐	☐	☐	☐	☐

INT. FINISH	B	1	2	3	U
PLASTER/DW	☐	☐	☐	☐	☐
PANELING	☐	☐	☐	☐	☐
UNFINISHED	☐	☐	☐	☐	☐

ACCOMMODATIONS					
# OF ROOMS					
BEDROOMS					
FIREPLACES					

HEAT & AC	B	1	2	3	U
NO HEAT	☐	☐	☐	☐	☐
CTRL HEAT	☐	☐	☐	☐	☐
HW/STEAM	☐	☐	☐	☐	☐
ELECTRIC	☐	☐	☐	☐	☐
HEAT PUMP	☐	☐	☐	☐	☐
FLR/WALL	☐	☐	☐	☐	☐
STVE/SPCE	☐	☐	☐	☐	☐
GEOTHERMAL	☐	☐	☐	☐	☐
OUTSIDE	☐	☐	☐	☐	☐
CTRL A/C	☐	☐	☐	☐	☐

PLUMBING	BASE ☐				
X FULL BATH					
X HALF BATH					
X FIXTURES					

FLOOR	AREA	CONST	VALUE

SUBTOTAL		0
MULTI-FAMILY #	0	0
BUILDING TYPE	000%	0
BSMT FINISH	0 S.F.	0
FIREPLACE #	0	0
HEATING	0 S.F.	0
AIR COND	0 S.F.	0
PLUMBING #	0	0
GARAGES & CARPORTS		0
EXTRA FEATURES		0
SUBTOTAL		0
GRADE FACTOR		%
UNADJUSTED VALUE		0
FACTOR		%

SKETCH

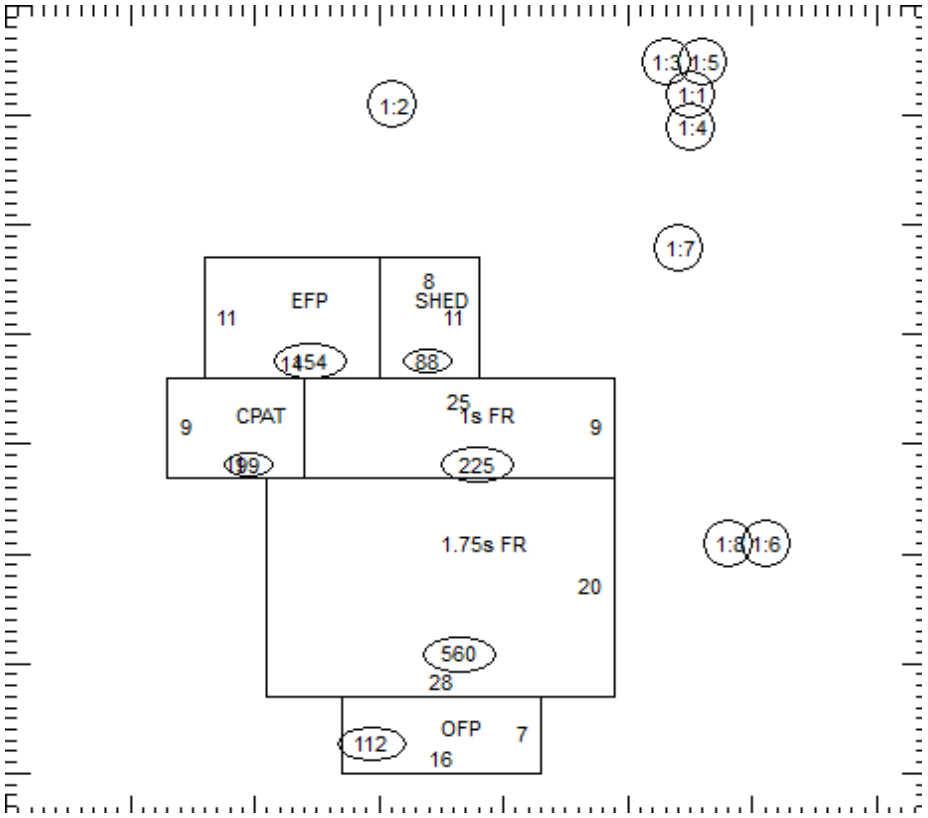

OCCUPANCY	ST.HT	SIZE	AREA	GRADE	PRICE	AGE	REMD	CND	UNADJ VAL	PHYS	PHYS VAL	FUNC	TRUE VAL
DWELLING		SK											
1													
2													
3													
4													
5													
6													
7													
8													
9													
10													
11													
												TOTAL	0

30-0015028.0000

COMMENTS

30-0015028.0000

HILLVIEW FARMS INC

19819 ST RT 31
MARYSVILLE, OH 43040

TAYLOR TOWNSHIP / MARYSVILLE EVSD

LEGAL INFORMATION

VMS 4264
BK 282 PG 556
Acres:34.1080

079-00-00-030.000
AGR DISTRICT: :2019:2019

QUALIFIED CREDITS: CAUV: 83483: 1983 (01/26/2023)

Property Class: 111
Neighborhood 3059305
Map:
Block:
Card:
Bk: Pg:

	OWNERSHIP	ADDRESS	CITY	STATE	ZIP	DATE	AMOUNT	DEED:CONV#: ACRES	JS	VALID
1	HILLVIEW FARMS INC	19819 STATE ROUTE 31	MARYSVILLE	OH	43040	01/01/1900	0	UNK : 0:34.1080	☐	☐
2							0	0	☐	☐
3							0	0	☐	☐

X: ☐ TTO LISTER: ALW DATE: 08/23/2010 TIME: 12:00:00 AM ☐ LETTER ☐ LETTER REC'D GIS CODE

STREET/ROAD	TOPOGRAPHY	PU-UTILITIES-PR	NEIGHBORHOOD	INFLUENCE FACTORS	
■ PAVED	☐ LEVEL	☐ WATER ■	☐ IMPROVING	☐ A. NO ROAD	☐ F. RESTRICT
☐ GRAVEL	☐ HIGH	☐ SEWER ■	☐ STATIC	☐ B. TOPGRHY	☐ G. WOOD LT
☐ DIRT	☐ LOW	☐ GAS ☐	☐ DECLINING	☐ C. EX FRONT	☐ H. VACANCY
☐ SIDEWALKS	■ ROLLING	■ ELECTRIC ☐	☐ OLD	☐ D. QUANTITY	☐ I. WATER FRONT
☐ CURBS	☐ STANDARD	☐ STANDARD	☐ STANDARD	☐ E. SZ/SHAPE	☐ J. OTHER/CDU

PROPERTY LOCATION
19819 ST RT 31, MARYSVILLE 43040

COMMENT

LAND COMPUTATIONS

LAND TYPE	SIZE	M RATE C	INF	M VALUE C
Total Acres: 34.1080			TOTAL	241,770 53,310

VALUATION SUMMARY

VALUE YEAR (EFF RATE)		2016 (58.11)	2015 (60.18)	2015 (60.18)	2014 (60.17)	2014 (60.17)
REASON FOR CHANGE		RAPP	CAUV	Misc	CAUV	MISC
APPRAISED VALUE	LAND	175,950	84,700	151,420	84,700	151,420
	IMPR	81,260	74,870	74,870	74,870	74,870
	TOTAL	257,210	159,570	226,290	159,570	226,290
ASSESSED VALUE	LAND	61,580	29,650	53,000	29,650	53,000
	IMPR	28,440	26,200	26,200	26,200	26,200
	TOTAL	90,020	55,850	79,200	55,850	79,200
NET GENERAL		3,203.32	3,033.14	3,033.14	3,032.64	3,032.64

OCCUPANCY	EXTERIOR
☐SF ☐DU ☐TR	☐ WOOD
☐CONVERSION	☐ STUCCO
BUILDING TYPE	☐ ALM/VYNL
☐ MOBILE HOME	☐ CONC BLK
☐ BI/TR LEVEL	☐ METAL
☐ MOD/MAN	☐ BRICK
☐ _____	☐ STONE

ROOFING	ROOF TYPE
☐ METAL	☐ GABLE
☐ SLT/TLE	☐ HIP
☐ SHINGLES	☐ GAMBREL
☐ SHAKES	☐ MANSARD
☐ COMPOSITE	☐ FLAT

FLOORS	B	1	2	3	U
CONCRETE	☐	☐	☐	☐	☐
WOOD	☐	☐	☐	☐	☐
TILE/COMPO	☐	☐	☐	☐	☐
CARPET	☐	☐	☐	☐	☐

INT. FINISH	B	1	2	3	U
PLASTER/DW	☐	☐	☐	☐	☐
PANELING	☐	☐	☐	☐	☐
UNFINISHED	☐	☐	☐	☐	☐

ACCOMMODATIONS					
# OF ROOMS					
BEDROOMS					
FIREPLACES					

HEAT & AC	B	1	2	3	U
NO HEAT	☐	☐	☐	☐	☐
CTRL HEAT	☐	☐	☐	☐	☐
HW/STEAM	☐	☐	☐	☐	☐
ELECTRIC	☐	☐	☐	☐	☐
HEAT PUMP	☐	☐	☐	☐	☐
FLR/WALL	☐	☐	☐	☐	☐
STVE/SPCE	☐	☐	☐	☐	☐
GEOTHERMAL	☐	☐	☐	☐	☐
OUTSIDE	☐	☐	☐	☐	☐
CTRL A/C	☐	☐	☐	☐	☐

PLUMBING	BASE ☐				
X FULL BATH					
X HALF BATH					
X FIXTURES					

FLOOR	AREA	CONST	VALUE

SUBTOTAL		0
MULTI-FAMILY #	0	0
BUILDING TYPE	000%	0
BSMT FINISH	0 S.F.	0
FIREPLACE #	0	0
HEATING	0 S.F.	0
AIR COND	0 S.F.	0
PLUMBING #	0	0
GARAGES & CARPORTS		0
EXTRA FEATURES		0
SUBTOTAL		0
GRADE FACTOR		%
UNADJUSTED VALUE		0
FACTOR		%

SKETCH

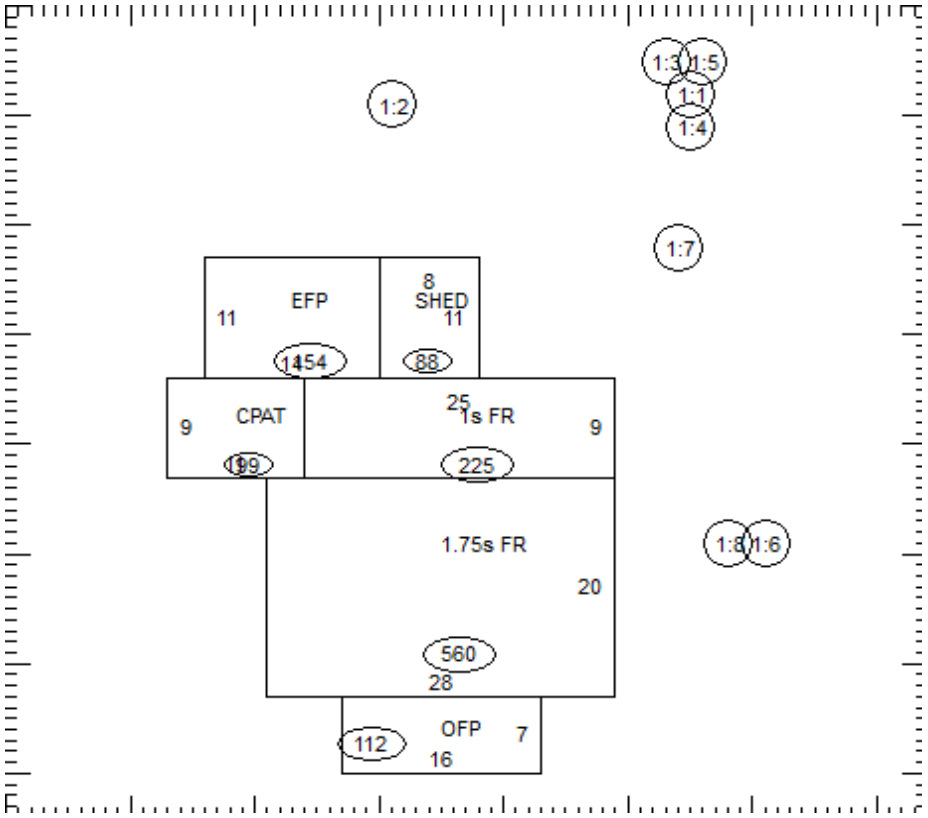

OCCUPANCY	ST.HT	SIZE	AREA	GRADE	PRICE	AGE	REMD	CND	UNADJ VAL	PHYS	PHYS VAL	FUNC	TRUE VAL
DWELLING		SK											
1													
2													
3													
4													
5													
6													
7													
8													
9													
10													
11													
												TOTAL	0

30-0015028.0000

COMMENTS

30-0015028.0000

HILLVIEW FARMS INC

19819 ST RT 31
MARYSVILLE, OH 43040

TAYLOR TOWNSHIP / MARYSVILLE EVSD

LEGAL INFORMATION

VMS 4264
BK 282 PG 556
Acres:34.1080

079-00-00-030.000
AGR DISTRICT: :2019:2019

QUALIFIED CREDITS: CAUV: 83483: 1983 (01/26/2023)

Property Class: 111
Neighborhood 3059305
Map:
Block:
Card:
Bk: Pg:

	OWNERSHIP	ADDRESS	CITY	STATE	ZIP	DATE	AMOUNT	DEED:CONV#: ACRES	JS	VALID
1	HILLVIEW FARMS INC	19819 STATE ROUTE 31	MARYSVILLE	OH	43040	01/01/1900	0	UNK : 0:34.1080	☐	☐
2							0	0	☐	☐
3							0	0	☐	☐

X: ☐ TTO LISTER: ALW DATE: 08/23/2010 TIME: 12:00:00 AM ☐ LETTER ☐ LETTER REC'D GIS CODE

STREET/ROAD	TOPOGRAPHY	PU-UTILITIES-PR	NEIGHBORHOOD	INFLUENCE FACTORS	
■ PAVED	☐ LEVEL	☐ WATER ■	☐ IMPROVING	☐ A. NO ROAD	☐ F. RESTRICT
☐ GRAVEL	☐ HIGH	☐ SEWER ■	☐ STATIC	☐ B. TOPGRHY	☐ G. WOOD LT
☐ DIRT	☐ LOW	☐ GAS ☐	☐ DECLINING	☐ C. EX FRONT	☐ H. VACANCY
☐ SIDEWALKS	■ ROLLING	■ ELECTRIC ☐	☐ OLD	☐ D. QUANTITY	☐ I. WATER FRONT
☐ CURBS	☐ STANDARD	☐ STANDARD	☐ STANDARD	☐ E. SZ/SHAPE	☐ J. OTHER/CDU

PROPERTY LOCATION
19819 ST RT 31, MARYSVILLE 43040

COMMENT

LAND COMPUTATIONS

LAND TYPE	SIZE	M RATE C	INF	M VALUE C
Total Acres: 34.1080			TOTAL	241,770 53,310

VALUATION SUMMARY

VALUE YEAR (EFF RATE)		2013 (56.82)	2013 (56.82)			
REASON FOR CHANGE		CAUV	RAPP			
APPRAISED VALUE	LAND	84,700	151,420			
	IMPR	74,870	74,870			
	TOTAL	159,570	226,290			
ASSESSED VALUE	LAND	29,650	53,000			
	IMPR	26,200	26,200			
	TOTAL	55,850	79,200			
NET GENERAL		2,856.12	2,856.12			

OCCUPANCY	EXTERIOR
☐SF ☐DU ☐TR	☐ WOOD
☐CONVERSION	☐ STUCCO
BUILDING TYPE	☐ ALM/VYNL
☐ MOBILE HOME	☐ CONC BLK
☐ BI/TR LEVEL	☐ METAL
☐ MOD/MAN	☐ BRICK
☐ _____	☐ STONE

ROOFING	ROOF TYPE
☐ METAL	☐ GABLE
☐ SLT/TLE	☐ HIP
☐ SHINGLES	☐ GAMBREL
☐ SHAKES	☐ MANSARD
☐ COMPOSITE	☐ FLAT

FLOORS	B	1	2	3	U
CONCRETE	☐	☐	☐	☐	☐
WOOD	☐	☐	☐	☐	☐
TILE/COMPO	☐	☐	☐	☐	☐
CARPET	☐	☐	☐	☐	☐

INT. FINISH	B	1	2	3	U
PLASTER/DW	☐	☐	☐	☐	☐
PANELING	☐	☐	☐	☐	☐
UNFINISHED	☐	☐	☐	☐	☐

ACCOMMODATIONS					
# OF ROOMS					
BEDROOMS					
FIREPLACES					

HEAT & AC	B	1	2	3	U
NO HEAT	☐	☐	☐	☐	☐
CTRL HEAT	☐	☐	☐	☐	☐
HW/STEAM	☐	☐	☐	☐	☐
ELECTRIC	☐	☐	☐	☐	☐
HEAT PUMP	☐	☐	☐	☐	☐
FLR/WALL	☐	☐	☐	☐	☐
STVE/SPCE	☐	☐	☐	☐	☐
GEOTHERMAL	☐	☐	☐	☐	☐
OUTSIDE	☐	☐	☐	☐	☐
CTRL A/C	☐	☐	☐	☐	☐

PLUMBING	BASE ☐				
X FULL BATH					
X HALF BATH					
X FIXTURES					

FLOOR	AREA	CONST	VALUE

SUBTOTAL		0
MULTI-FAMILY #	0	0
BUILDING TYPE	000%	0
BSMT FINISH	0 S.F.	0
FIREPLACE #	0	0
HEATING	0 S.F.	0
AIR COND	0 S.F.	0
PLUMBING #	0	0
GARAGES & CARPORTS		0
EXTRA FEATURES		0
SUBTOTAL		0
GRADE FACTOR		%
UNADJUSTED VALUE		0
FACTOR		%

SKETCH

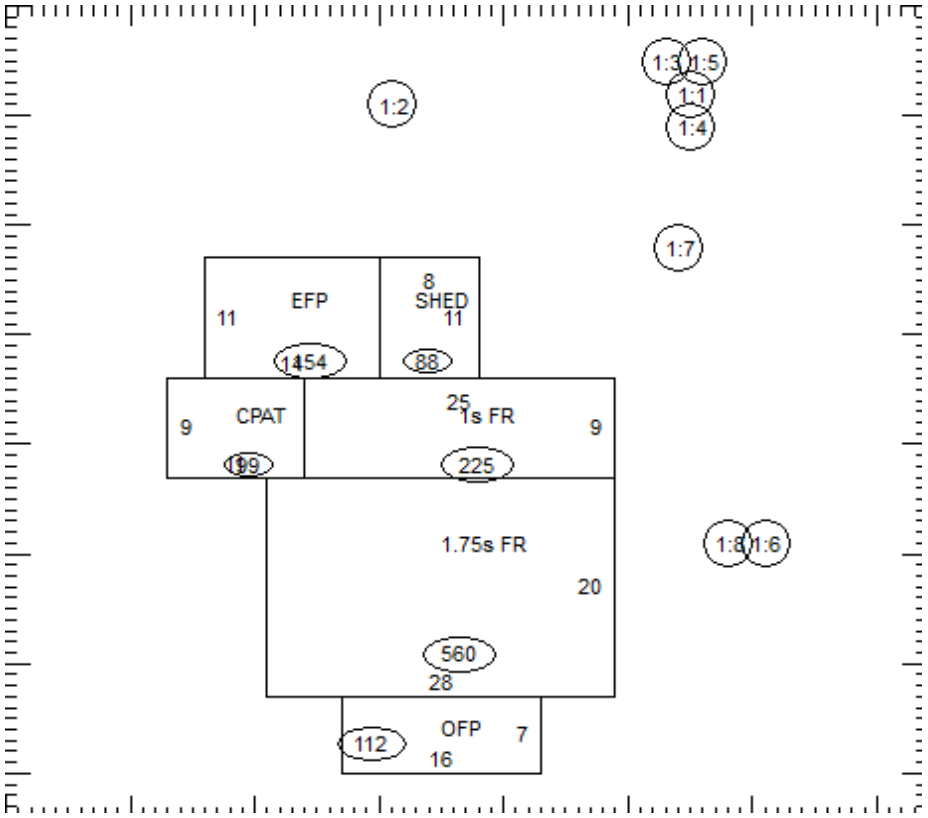

OCCUPANCY	ST.HT	SIZE	AREA	GRADE	PRICE	AGE	REMD	CND	UNADJ VAL	PHYS	PHYS VAL	FUNC	TRUE VAL
DWELLING		SK											
1													
2													
3													
4													
5													
6													
7													
8													
9													
10													
11													
												TOTAL	0

30-0015028.0000

COMMENTS